Range Service Manual

2015

Atwood®

Atwood Mobile Products LLC

Atwood®
Atwood Mobile Products
1120 North Main Street • Elkhart, IN 46514-3203
PHONE: 574•262•2655 **FAX:** 574•266•5410
INTERNET: http://www.atwoodmobile.com

INTRODUCTION

The 2015 edition of the Atwood Range Service Manual is a resource created to help service technicians identify Atwood product by serial number, diagnose service problems and efficiently and effectively process warranty claims.

Each of the manuals within this series offers a general overview of the product as well as more specific product information. For the range product within this manual, you will find model identification, sequence of operation, part identification and troubleshooting guides, warranty procedures, flat rate schedules, and replacement part reference charts.

Due to the rapidly changing personal computer revolution, we have placed troubleshooting information in a variety of places to make sure that the most accurate information is available. The best place to find the current information about Atwood products is our website: www.atwoodmobile.com. At our website brochures may be downloaded, troubleshooting guides reviewed and the latest information bulletins can be read. In addition, all Atwood Authorized Service Centers are listed on our site, accessible via an easy-to-use search system.

Service for all Atwood products is handled our of our Elkhart Indiana location. Should you have any questions regarding our products or the information contained in this manual simply dial our Toll Free 1-866-869-3118. Be sure to have the Model and Serial Numbers when you call.

Atwood Service Department

TABLE OF CONTENTS

INTRODUCTION……2
TABLE OF CONTENTS……..3
COOKING APPLIANCE TERMINOLOGY……4
MODEL NUMBER IDENTIFICATION……5
GAS COMPONENT IDENTIFICATION PICTORALS……...6-7
SEQUENCE OF OPERATION-MODELS 33, 34, 35, 20 & 21……...…..8
TROUBLE SHOOTING GUIDE…… 9-10
INSTALLATION (Ranges & Slide-ins)
Cabinet and counter cut-out requirements……11
Recessed bi-fold cut-out requirement……..11
Electronic ignition schematic……11
Range hood mounting information……..11
PART DIAGRAMS AND PART NUMBERS (Ranges & Slide-ins)
Model 33, RV/CV and RA/CA …… ...12-14
Model 34, RV/CV and RA/CA……15-16
Model 35, RV/CV and RA/CA……17-18
Bi-Fold Covers and cut-out requirements……..19
INSTALLATION (Drop-ins)
Cabinet and counter cut-out requirements……20
PART DIAGRAMS AND PART NUMBERS (Drop-ins)
Covers for DV Drop-in Models……20
Model DV20 and DV30……21
WARRANTY……22
EXTENDED WARRANTY……23
ATWOOD RETURN GOODS PROGRAM……..24
WARRANTY SERVICE REPORT……25
FLAT RATE SCHEDULE……..26

INFORMATION NOTICES

Cooking Appliance Terminology

Terminology	Definition
ANSI	American National Standard for Recreation Vehicle Cooking Gas Appliances
Burner Electrode	The spark source to light top burners with piezo/12 VDC electronic ignition. Replaceable for 33 range series.
Calibration	The condition that determines whether the thermostat is registering temperatures properly.
CSA	Certification Agency (Canadian Standards Association)
Main Burner Orifice	A precision drilled thimble shaped component that meters gas flow to the main burner.
Manifold	The constantly pressurized tube or pipe that supplies gas to the burner valves.
Oven Thermostat	It is the component that regulates the temperature of the oven at the desired cooking temperature and supplies gas for both the standby and heater pilots.
Piezo Ignitor	An electro-mechanical device that can be used to ignite a top burner.

Terminology	Definition
Pilot Orifice	A precision drilled thimble shaped component that meters gas flow to the pilot.
Regulator	Device that reduces the high pressure from the LP bottles to a lower pressure for the appliances
Sealed Burner	A burner head attached directly to the porcelain main top which prevents spilling to the burner box.
Standby Pilot	The oven pilot that burns constantly and provides the base for the oven burner.
Thermal Bulb	The bulb located in the oven and connected to the thermostat that contains thermal fluid and causes the thermostat to close and open based on the set cooking temperature.
Thermocouple	Senses pilot flame for the oven and controls safety valve and thermostat.
Yellow Tipping	A burner flame with excessive yellow tipping can be caused by improper gas/air mixture caused by improper alignment, restriction of the orifice, or blockage of the venture tube.

Model Number Identification

NARROW DOOR - OLD WEDGEWOOD -
Range, Cooktop & Slide-In

R 17 3 6 - A B P

- **TOP BURNER IGNITION**
  - P= Piezo
- **DOOR COLOR**
  - A= almond, B= black, G= black glass, S= stainless, W= black glass w/window, 1= white steel door, 2= white glass, 3= white glass w/window
- **TOP COLOR**
  - A= almond, B= black, S= stainless, W= white
- **GRATE STYLE OR OUTPUT**
  - 0= round, 5= designer, 6= high output, 7= Harper Wyman manifold & burner top linear valves & high output, 8= high output Harper Wyman top burner & oven gas system
- **NUMBER OF BURNERS**
  - 2, 3, 4
- **OVEN HEIGHT**
  - 17", 21"
- **TYPE OF APPLIANCE**
  - C= cooktop, R= range

WIDE DOOR - OLD WEDGEWOOD -
Range, Cooktop and Slide-In

RW 21 3 0 - A B P

- **TOP BURNER IGNITION**
  - P= Piezo
- **DOOR COLOR**
  - A= almond, B= black, G= black glass, 1= white steel door, 2= white glass,
- **TOP COLOR**
  - A= almond, B= black, W= white
- **REVISION NUMBER**
  - 0= original version, 1= First version
- **NUMBER OF BURNERS**
  - 3
- **OVEN HEIGHT**
  - 17", 21"
- **TYPE OF APPLIANCE**
  - RW= Wedgewood w/wide door range, CW= Wedgwood cooktop

OLD WEDGEWOOD -
Drop-In Cooktop

D- 2 5 HP

- **SPECIAL FEATURE**
  - HP= high performance, ST= stainless top & taupe frame, SV= stainless top on Volkswagen, SG= stainless top & gray frame
- **GRATE STYLE**
  - O= round, 5= designer, 6= high output
- **NUMBER OF BURNERS**
  - 2, 3,4
- **TYPE OF APPLIANCE**
  - D= drop-in

ATWOOD (DV)- OLD ATWOOD (DA)
Drop-In Cooktop with Open Burners

DV - 2 0 B S E

- **TOP BURNER IGNITION**
  - E= Electronic Ignition
- **BURNER**
  - S= sealed, P= porcelain
- **TOP**
  - B= black, W= white, S= stainless, C= chrome
- **REVISION**
  - 0 1 2 revision
- **NUMBER OF BURNERS**
  - 2, 3
- **TYPE OF APPLIANCE**
  - DV= Sealed Burner, DA= Atwood drop-in

WEDGEWOOD VISION - Range, Cooktop & Slide-In

RV 21 3 3 - B B P X N R UPS

- UPS= Shippable by UPS
- R= Returnable package
- N= Flush control panel
- X= Extended gas tube
- **TOP BURNER IGNITION**
  - P= Rotary Piezo, E= Electronic
- **DOOR COLOR**
  - B= black, G= black glass, S= stainless, 1= white, 2= white glass, 3= white panel/handle, 4= stainless panel/white handle
- **TOP COLOR**
  - B= black, W= white, O= bisque, S= stainless,
- **REVISION NUMBER**
  - 1= original version, 2= effective 8/1/01, 3= white panel/white handle
- **NUMBER OF BURNERS**
  - 3
- **OVEN HEIGHT**
  - 17", 21"
- **TYPE OF APPLIANCE**
  - RV= Wedgewood Vision, CV= Wedgewood Vision cooktop

ATWOOD - Range (Oven & Cooktop w/Sealed Burners) & Slide In

RA 21 3 3 - B B E

- **TOP BURNER IGNITION**
  - P= Rotary Piezo, E= Electronic
- **DOOR COLOR**
  - B= black, S= stainless, 2= white glass
- **TOP COLOR**
  - B= black, W= white
- **REVISION NUMBER**
  - 0= original version, 1, 2, 3
- **NUMBER OF BURNERS**
  - 3
- **OVEN HEIGHT**
  - 17", 21"
- **TYPE OF APPLIANCE**
  - RA= Atwood range, CA= Atwood cooktop

Range & Oven Gas Components

Harper Wyman

Harper Wyman Oven Control/Thermostat

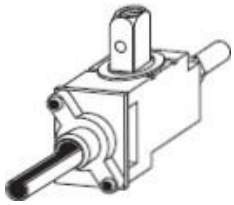

Harper Wyman Mini Burner Valve

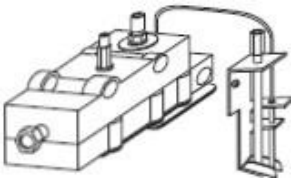

Safety Pilot Valve

- Ranges whose model number is R __8-32 have a complete Harper Wyman range valve system.
- Cooktops whose model number is R__8-32 to current model have a complete Harper Wyman valve system.
- Top burners are Harper Wyman and linear
- Lowest temperature on oven knob is 170 F.
- Oven control and safety pilot valves are also Harper Wyman.
- This safety pilot valve is no longer available.

Copreci

- **Mercury Free**

Copreci Oven Thermostat

Burner Valve

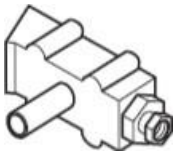

Orifice Block

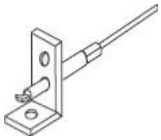

Pilot Assembly

- Ranges whose model number is R__33 have a Copreci oven thermostat with Mueller burner valves for the stove top.
- Lowest temperature on oven knob is 300 F.
- Slide-ins whose model number is C_3have Mueller burner valves.
- Pilot assembly is White Rodgers.

BSI

- **Mercury Free**

Oven Thermostat

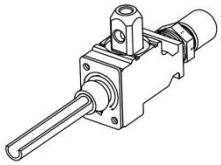

Burner Valve

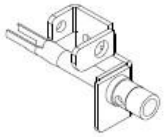

Pilot Assembly

- Ranges with model numbers R___34
- Lowest temperature on oven knob is 300F
- Burner valve also used in slide-ins(s) with model numbers C_34 and C_20

Seven Universe

- **Mercury Free**

Oven Thermostat

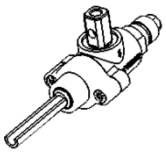

Burner Valve

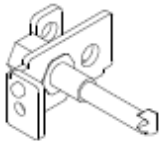

Pilot Assembly

- Ranges with model numbers R___35 and R___21.
- Lowest temperature on oven knob is 300°F.
- Burner valve also used in slide-in(s) with model number C_35 and C_21.

Gas Regulator—Used in all Atwood Ranges, slide-ins and drop-ins.
Seven Universe

Regulates gas pressure to nominal 10” W.C.

Replaces all previous brands including HarperWyman, Maxitrol, Oara, and BSI.

Sequence of Operation—Models 33, 34 and 35

Standard Pressure Regulator— This valve receives up to 13" W.C. gas pressure from regulated LP systems and reduces the pressure to 10" W.C. to the manifold.

Manifold—a continually pressurized pipe distributing gas to top burner valves and oven thermostat.

Oven Thermostat— supplies gas to the oven pilot, and main burner; regulates oven temperature.

Pilot Assembly— consists of a thermocouple and a pilot hood where gas passing through the orifice is directed toward the oven burner pilot holes. The user holds the magnet in initially by pushing the knob in at the "pilot/push/hold" rotation and manually lighting the pilot. After approximately 5 seconds, the thermocouple input will hold the magnet in the open position and the user can release the knob and adjust to the desired temperature.

Oven Thermostat - senses oven temperature by means of a thermal bulb located in the upper rear of the oven. The oven control knob is set to the desired temperature calling for heat; the fluid expands in the bulb as the temperature rises, moving the seat in the thermostat from full open to partial open as the desired temperature is reached, thus maintaining the set temperature. The gas is passed from the thermostat to the orifice block in the main burner, entering the burner and igniting from the pilot.

Oven Burner—The oven burner remains on once the thermostat is turned on. The size of the flame changes to a high or low flame by the thermostat as regulated by the user setting the knob and the thermostat bulb sensing a satisfied oven temperature.

Note: The pilot gas line will remain open as long as the pilot is lighted and the thermocouple senses flame. If the pilot goes out, the magnet will drop out and shut off gas flow to the pilot.

Component Identification

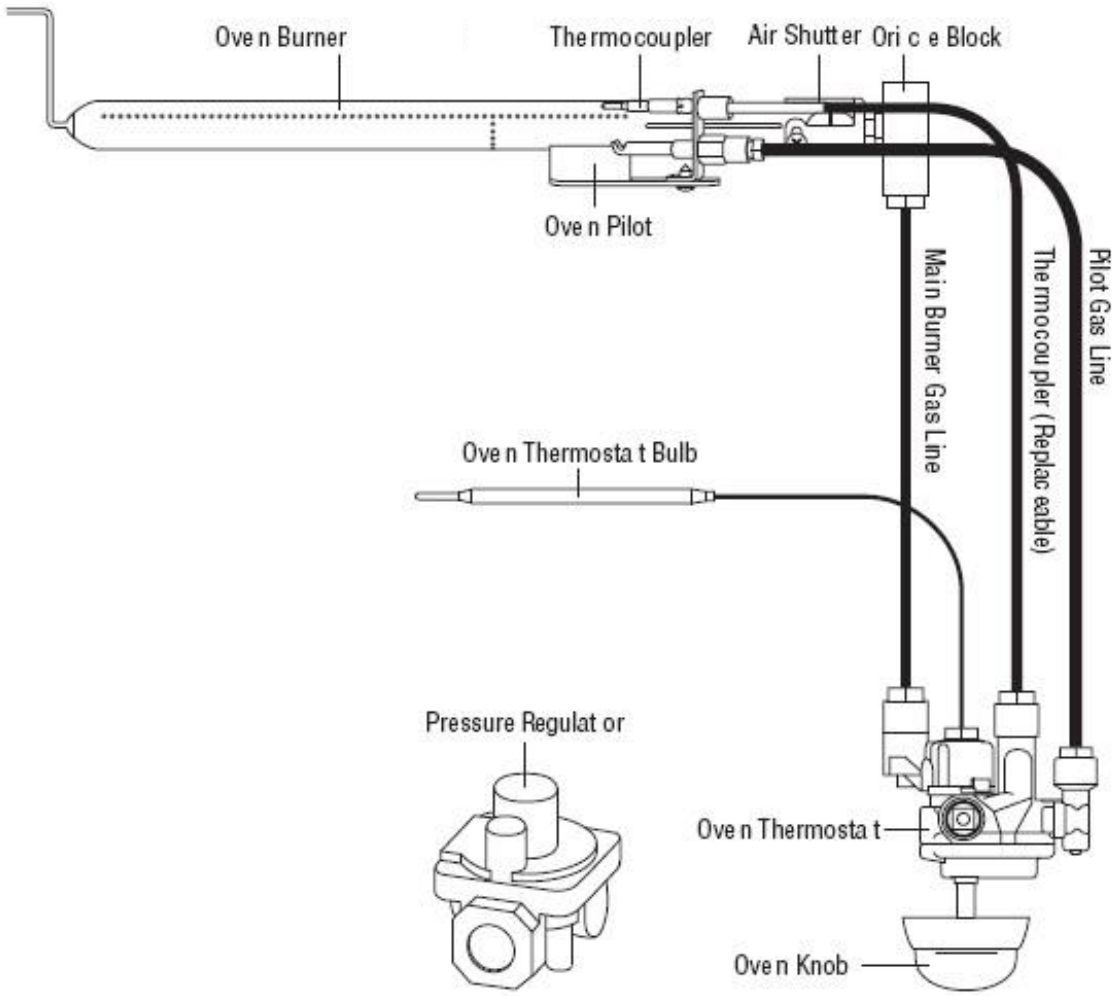

Atwood
Atwood Mobile Products LLC
1120 North Main Street • Elkhart, IN 46514
PHONE: 574-264-2131 FAX: 574-262-2550
INTERNET: http://www.atwoodmobile.com

Cooking Appliance

TROUBLE SHOOTING GUIDE

Effective: 8/7/13

Guides are only intended for use on Atwood® products by service technicians who have successfully completed Atwood® training. This guide should be used in conjunction with the appropriate Instruction Manual provided with the product and any applicable Industry Standards. This is not intended to be a complete list. Please direct questions concerning service of Atwood® products to 866-869-3118 before proceeding.

CAUSE	SOLUTION
RANGE PILOT WON'T LIGHT OR STAY LIT	
Insufficient gas pressure	1. Check for gas leaks and have system pressure checked by qualified LP gas technician. 2. Check gas supply 3. Set pressure to 11"W.C. with two or more gas appliances running.
Supply valve closed	Turn valve on
Blocked pilot orifice	Clean pilot orifice with toothpick
Pilot flame cover out of position	Reposition pilot flame cover, and/or remove carbon and/or coating of carbon
BURNER(S) WON'T LIGHT OR STAY LIT	
Insufficient gas pressure	Check for gas leaks, have system pressure checked by qualified gas technician
Incorrect air/gas mixture	Adjust air shutter if applicable
Blocked orifice	Clean with a toothpick
BURNER LIGHT BUT FLAME IS TOO SMALL	
Improper gas pressure	Check for gas leaks, have system pressure checked by qualified LP gas technician.
Improper air/gas mixture	Adjust air shutter if applicable
Problem burner valve	Replace burner valve
Blocked orifice	Clean with toothpick
BURNER FLAME LIFTS OFF BURNER HEAD	
Gas pressure too high	Have system pressure checked by a qualified LP gas technician
OVEN BURNER LIGHTS, BUT FLAME REMAINS VERY SMALL AND OVEN HEATS VERY SLOWLY	
Improper gas pressure	Check for gas leaks, have system pressure checked by qualified LP gas technician.
Blocked orifice	Clean with alcohol and cotton swab
OVEN BURNER FLAM E LIFTS OFF BURNER AND OVEN CYCLES TOO FREQUENTLY	
Gas pressure too high	Have system pressure checked by qualified LP gas technician, or Improper gas mixture
OVEN COOKS UNEVENLY AND/OR FOOD BURNS ON THE BOTTOM	
Poor oven ventilation	Oven too full for proper circulation- must have 1" clearance in all directions. Ventilation holes in oven bottom (shelf above burner) are covered. Check the top vent (back of range) it must be clear of obstructions.
Problem thermostat	Replace thermostat.
Oven not preheated	Oven must be preheated at least 15 minutes.
Thermo bulb out of position	Thermobulb must be in clip on back of oven – thermobulb should not touch Pans or oven walls.

OVEN PILOT OUTAGE

Safety Thermal Bulb out of position ------Re-position the safety thermal bulb.
Problem thermostat ----------Replace thermostat
Blocked oven vent ----------Remove obstruction from vent
Incorrect oven burner gas/air mixture-----Readjust air

YELLOW FLAME TIPS

Improper gas-air mixture ----------Adjust air shutter if applicable
Low gas pressure----------Check gas supply
Check for leaks and have the regulator checked
Set pressure to 11" water column

RA Ranges and Cooktops
Improper orifice to burner alignment ------Realign burner head and orifice tube assembly
Replace orifice

Operation and Trouble Shooting Guide – 33 Series and UP

TO LIGHT THE PILOT

Turn the oven knob to the pilot position and push in. Light pilot with a lighter.
Hold in for at least 30 seconds until pilot is well established.

PILOT WILL NOT COME ON

Check to see if the gas is turned on.
Is there gas in the tanks?
Check for blockage of the orifice, pilot assembly, or pilot line.
Check for kinks in the pilot line.

PILOT WILL NOT STAY ON

Hold oven knob ,pilot position, for up to 30 seconds.
Check gas supply.
Confirm that thermocouple Is fully inserted Into the thermocouple holder.
Pilot flame out of position. Pilot flame Is not engulfing thermocouple. Pilot assembly needs to be adjusted so that pilot flame is engulfing thermocouple.
Test thermocouple.
Thermostat knob is bottoming out on manifold cover (face plate). If knob can't fully engage, the magnet in the thermostat will not be established. Move manifold out further beyond face plate.

THERMOSTAT CALIBRATION

The ideal temperature variance is 25 degrees (plus or minus). This means that if the thermostat is set at 350 degrees, the temperature will range between 325 and 375. If the temperature exceeds 50 degrees, plus or minus, check for a kinked capillary tube.

CABINET & COUNTER CUT OUT CHART

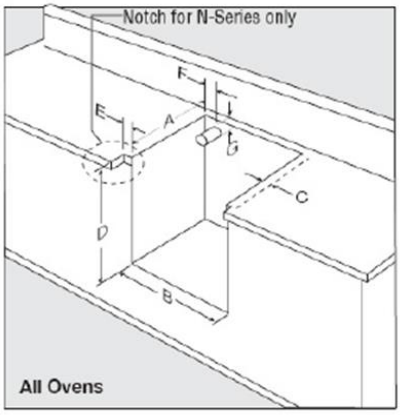

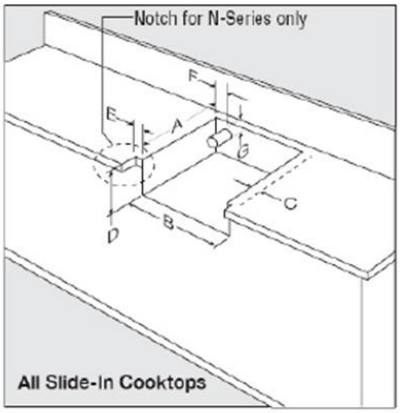

RECESSED BI-FOLD COVER CUT OUT CHART

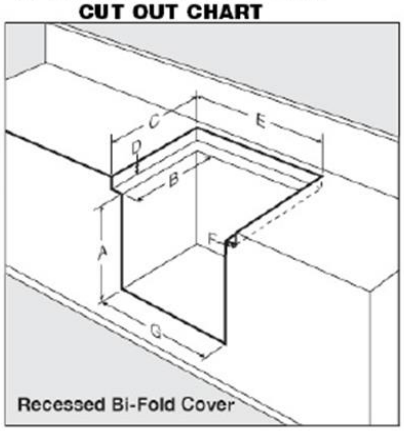

CABINET & COUNTER CUT OUT CHART - TABLEAU DE DECOUPE DES ELEMENTS ET DU COMPTOIR

CUT OUT DIMENSIONS DIMENSIONS DE LA DÉCOUPE	A	B	C (RV/CV)	C (RA/CA)	D	E	F	G
17" RV & RA Ranges	17.75"	20.25"	1.13"†	2.13"†	16"	0"	1.75"	1.5"
Série RV et RA 17"	451MM	514MM	29MM†	54MM†	406MM	0MM	45MM	38MM
21" RV & RA Ranges	17.75"	20.25"	1.13"†	2.13"†	20"	0"	1.75"	1.5"
Série RV et RA 21"	451MM	514MM	29MM†	54MM†	508MM	0MM	45MM	338MM
Slide-In CV & CA	17.75"*	20.25"	1.13"†	2.13"†	3"	0"	1.75"	1.5"
Série CV et CA à encastrement	451MM	514MM	29MM†	54MM†	76MM	0MM	45MM	38MM
17" RV & RA-N Series	17.75"	20.25"	1.13"†	2.13"†	16"	7/16"	1.75"	1.5"
Série RV 43cm RV et RA-N	451MM	514MM	29MM†	54MM†	406MM	11MM	45MM	38MM
21" RV & RA-N Series	17.75"	20.25"	1.13"†	2.13"†	20"	7/16"	1.75"	1.5"
Série RV 53cm RV et RA-N	451MM	514MM	29MM†	54MM†	508MM	11MM	45MM	38MM
Slide-In CV & CA-N Series	17.75"	20.25"	1.13"†	2.13"†	3"	7/16"	1.75"	1.5"
Série CV à encastrement CV et CA-N	451MM	514MM	29MM†	54MM†	76MM	11MM	45MM	38MM

NOTE: Maximum countertop overhang = 3/4" **NOTE**: rebord maximum du comptoir = 19 mm

† Minimum clearance to combustible materials. (typical two (2) sides and back)

* The overall unit depth for CA models with Electronic Ignition is 18-1/4" from cabinet face to back wall of cutout below counter.

† Éloignement minimum des matériaux combustibles .(Typiquement sur les deux côtés et à l'arrière)

* La profondeur totale des modèles CA à allumage électronique est de (464 mm). Ces dimensions sont celle de la découpe entre la façade de l'élément de cuisine et la paroi arrière du comptoir.

RECESSED BI-FOLD COVER - COUVERCLE PLIANT EN DEUX PARTIES ENCASTRÉ

LAMINATE MATERIAL MATÉRIAU STRATIFIÉ	MPD PART #	RV & RA OVEN 17"	RV & RA OVEN 21"	CV & CA SLIDE-IN	CUT OUT DIMENSIONS - DIMENSIONS DE LA DÉCOUPE					
		A	A	A	B	C	D	E	F	G
1/4" 6 mm	56397	16.0" 406 mm	20.0" 508 mm	3.0" 76 mm	17.75" 451 mm	20.0" 508 mm	2.31" 59 mm	24.5" 622 mm	2.13" 54 mm	20.25" 514 mm
1/32" .8 mm	56391	16.0" 406 mm	20.0" 508 mm	3.0" 76 mm	17.75" 451 mm	20.0" 508 mm	1.84" 47 mm	24.5" 622 mm	2.13 54 mm	20.25" 514 mm

SCHEMATIC DIAGRAM FOR ELECTRONIC IGNITION MODELS

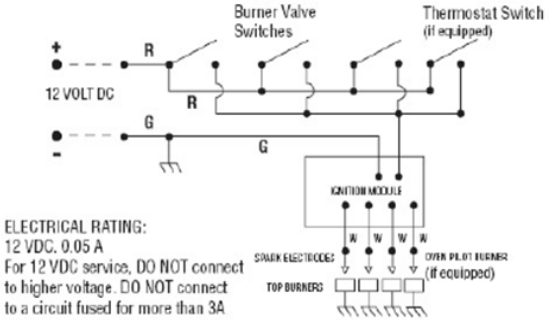

ELECTRICAL RATING:
12 VDC, 0.05 A
For 12 VDC service, DO NOT connect to higher voltage. DO NOT connect to a circuit fused for more than 3A

CONNECTION DIAGRAM FOR ELECTRONIC IGNITION MODELS

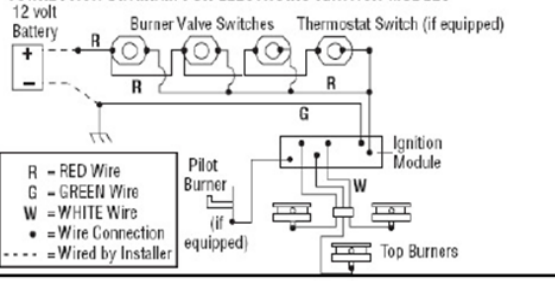

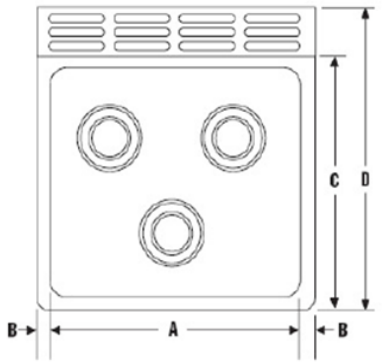

RANGE HOOD MOUNTING INFORMATION

	A	B	C	D
Range Top	19-3/8"			
Mounting Trim		3/4"		
Range Top Depth			15-7/8"	
Range Top plus Oven Vent				19-9/16"

MODEL 33 - WEDGEWOOD (RV / CV) - ATWOOD (RA / CA)

Range & Slide-In Parts Identification

RV SERIES - MATCH LIGHT, PIEZO & ELECTRONIC IGNITION

RA SERIES - PIEZO & ELECTRONIC IGNITION

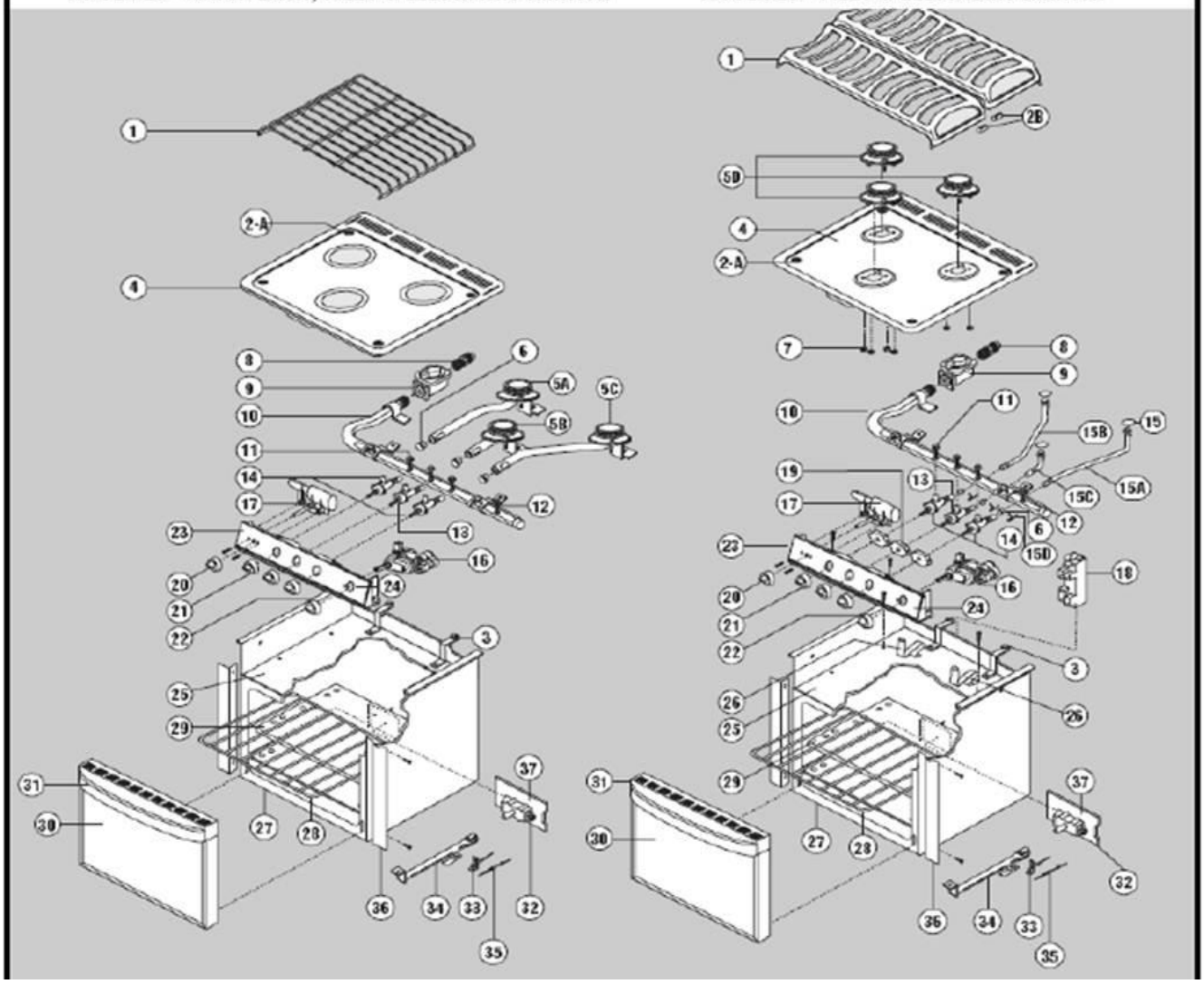

Item	Description	WEDGEWOOD		ATWOOD	
		RV		RA	
		1733	2133	1733	2133
30	Door assembly includes handle- black steel	51977	51983	51977	51983
30	Door assembly includes handle – white steel	51978	51984	51978	51984
30	Door assembly includes handle – white glass	51981	51987	51981	51987
30	Door assembly includes handle – black glass	51980	51986	51980	51986
30	Door assembly includes handle – stainless steel	51958	51992	51958	51992
30	Door assembly white handle – white steel	51957		51957	
	Door-Glass insert – Sm. Black	51881		51881	
	Door-Glass Insert – Lg Blk		51882		51882
	Door-Glass Insert – Sm White	51883		51883	
	Door-Glass Insert – Lg white		51884		51884
31	Oven Door Handle - Black	52025	52025	52025	52025
	Oven Door Handle - White	52026	52026	52026	52026

Item	Description	WEDGEWOOD			ATWOOD		
		RV		CV	RA		CA
		1733	2133	33	1733	2133	33
1	Grate - Black	56272	56272	56272	57190 - #	57190 - #	57190 - #
2A	Grommet (4) #	53009	53009	53009	53009	53009	53009
2B	Sealed Grate U-Channel (4) #				57194	57194	57194
3	Top Spring Clip (2) #	51035	51035	51035	51035	51035	51035
4	Range Top Assy – white (obs)	52007	52007	52007	57300	57300	57300
	Range Top Assy - black (obs)	52008	52008	52008	57200	57200	57200
	Range Top Assy – SST (obs)	56742	56742	56742	57305	57305	57305
5A	Burner, Piezo – left rear (WSL)	57205	57205	57205			
5A	Burner, Matchlit – left rear (obs)	57206	57206	57206			
5B	Burner, Piezo – center front (WSL)	57201	57201	57201			
5B	Burner, Matchlit – center front (obs)	57202	57202	57202			
5C	Burner, Piezo – right rear (WSL)	57203	57203	57203			
5C	Burner, Matchlit – right rear (obs)	57204	57204	57204			
5D	Burner, Piezo/Electronic Ignition (obs)				57276	57276	57276
6	Bushing – Burner (3) #	53011	53011	53011	53011	53011	53011
7	Hex Nut (2) #				51004	51004	51004
8	Brass Fitting	52294	52294	52294	52294	52294	52294
9	Pressure Regulator	51062	51062	51062	51062	51062	51062
10	3 – Burner Manifold (after serial number F11040784)(Dbl D) (obs)	57217	57217	57216	57217	57217	57216
	3 – Burner Manifold (before serial number F11040783) (obs)	57270	57270	57268	57270	57270	57268
11	Bolt – valve (3) #	57278	57278	57278	57278	57278	57278
12	Bolt – Oven thermostat	57266	57266		57266	57266	
13	Valve, Burner- Mini 9000 BTU (after serial number F11030969-R and F11040784-C) (green) (obs)	57218	57218	57218	57218	57218	57218
	Valve, Burner – Mini 9000 BTU (before serial number F11030968-R and F11040784-C) (obs)	57252	57252	57252	57252	57252	57252
14	Valve, Burner – Mini 6500 BTU (after serial number F11030969-R and F11040784-C) (yellow) (wsl)	57213	57213	57213	57213	57213	57213
	Valve, Burner – Mini 6500 BTU (before serial number F11030968-R and F11040783-C) (obs)	57251	57251	57251	57251	57251	57213
15	Burner Gasket Kit (includes 3)				50140	50140	50140
15A	Burner Tube – right rear				57110	57110	57110
15B	Burner Tube – left rear				57108	57108	57108
15C	Burner Tube – center front				57109	57109	57109
15D	Burner Clip, wire (3) #				57198	57198	57198
16	Thermostat, oven control (wsl)	57294	57294		57294	57294	
17	Piezo ignitor	56096	56096	56096	56096	56096	56096
18	12V Ignition Module (obs)	57277	57277	57277	57277	57277	57277
19	Valve ignition switch	57262	57262	57262	57262	57262	57262
20	Piezo knob - black	51344	51344	51344	51344	51344	51344
	Piezo knob – white	53223	53223	53223	53223	53223	53223
21	Burner knob – black (3) #	56148	56148	56148	56148	56148	56148
	Burner knob – white (3) #	53221	53221	53221	53221	53221	53221
22	Oven thermostat knob - black	57258	57258		57258	57258	
	Oven thermostat knob - white	57291	57291		57291	57291	
23	Control panel Assy – w/o Label	*	*	*	*	*	*
24	Control panel label	*	*	*	*	*	*
25	Burner box	51687	51687	51687	51687	51687	51687
26	Burner spring clips (3) #				57558	57558	57558
27	Oven can	51969	51970		51969	51970	
28	Oven rack	51069	51069		51069	51069	
29	Oven shelf	51670	51670		51670	51670	
32	Orifice block (obs)	57271	57271		57271	57271	
33	Pilot assembly	57247	57247		57247	57247	
34	Burner, oven	57275	57275		57275	57275	
35	Thermocouple	57274	57274		57274	57274	
36	Oven can trim	51975	51975		51975	51975	
37	Orifice block plate	57310	57310		57310	57310	
N/S	Wiring – Harness – Electronic ignition switches				57262	57262	57262
	Wiring lead – electronic ignition electrodes				57261	57261	57261
	Wiring lead – electronic ignition ground				57260	57260	57260
N/S	Wiring lead – piezo (3) #	57264	57264	57264	57264	57264	57264
N/S	Burner electrode (3) #	54800	54800	54800	54800	54800	54800

Continued,

N/S	Hinge assembly	57557	57559		57557	57559	
N/S	Kit – Door Seal	51060	51061		5106	51061	
N/S	Kit – Gas tube Supply Oven (wsl)	57273	57272		57273	57272	
N/S	Nylon edge guard (4) #	53218	53218	53218			
N/S	Thermal bulb clip	5134	51364		51364	51364	
N/S	Towel Bar			53205			53205
N/S = Not shown in the illustration OBS = Obsolete # = Order quantity needed WSL = while supplies last * = Order by model, color, and style							

MODEL 34 - WEDGEWOOD (RV / CV) - ATWOOD (RA / CA)
Oven & Slide-In Cooktop Parts Identification

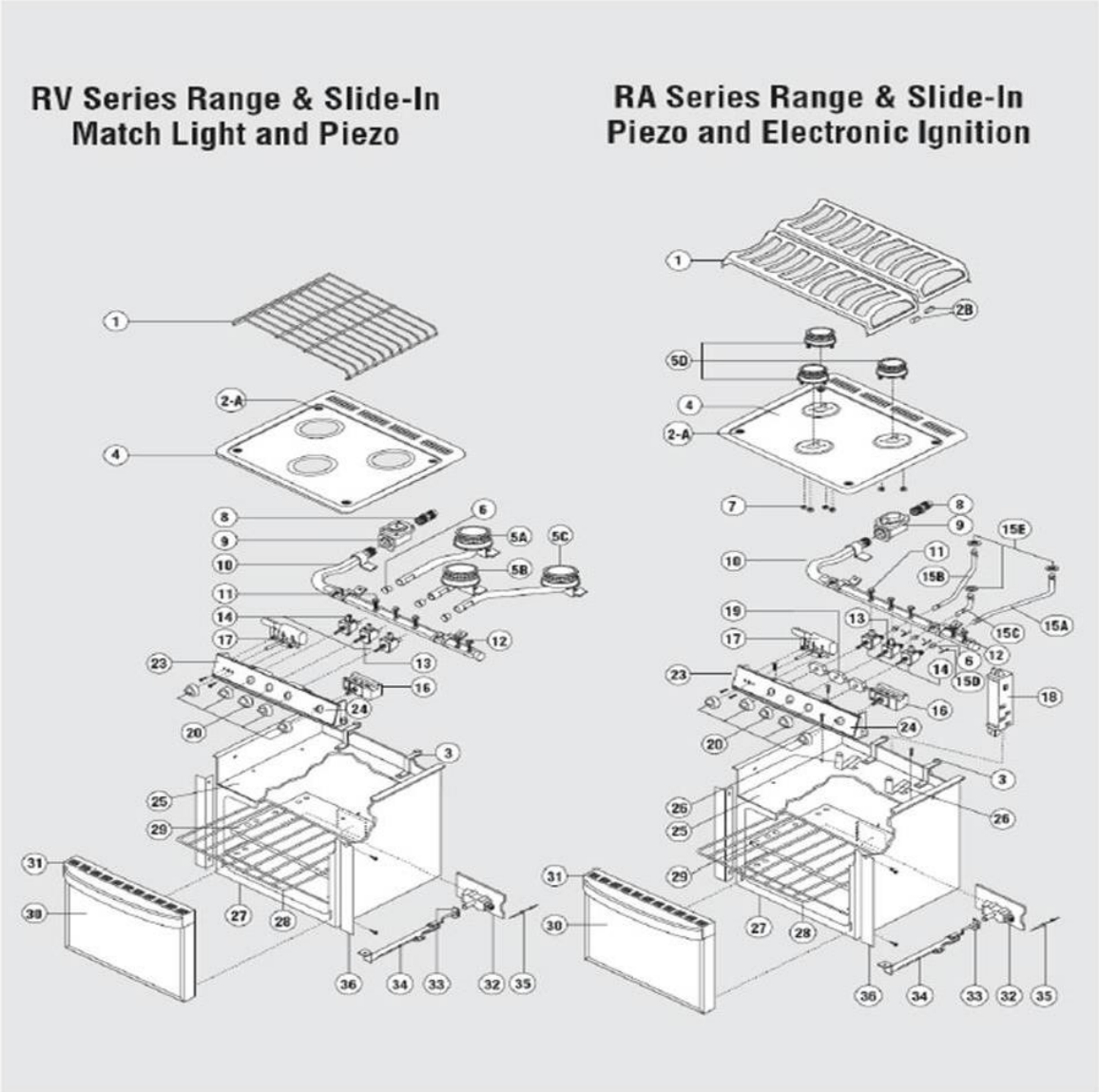

Item	Description	WEDGEWOOD			ATWOOD		
		RV		CV	RA		CA
		1734	2134	34	1734	2134	34
1	Grate - black	56272	56272	56272	57190	57190	57190
2A	Grommet	53009	53009	53009	53009	53009	53009
2B	Sealed Grate U-Channel				57194	57194	57194
3	Top Spring Clip	51035	51035	51035	51035	51035	51035
4	Range Top – white, side latches	52014	52014	52014	57534	57534	57534
	Range Top – black, side latches	52015	52015	52015	57533	57533	57533
	Range Top – stainless steel, side latches	57532	57532	57532	57529	57529	57529
5A	Kit, Burner, Sparklite – left (WSL)	57542	57542	57542			
5A	Kit, Burner, Matchlit – left (WSL)	57543	57543	57543			

Continued

5B	Kit, Burner, Sparklite – center (WSL)	57540	57540	57540			
5B	Kit, Burner, Matchlit – center (WSL)	57541	57541	57541			
5C	Kit, Burner, Sparklite – right (WSL)	57538	57538	57538			
5C	Kit, Burner, Matchlit – right (WSL)	57539	57539	57539			
5D	Kit, Burner w/ignitor (OBS)				57546	57546	57546
6	Bushing, Burner	53011	53011	53011	53011	53011	53011
7	Hex Nut				51004	51004	51004
8	Brass Fitting	52294	52294	52294	52294	52294	52294
9	Kit, gas regulator	51062	51062	51062	51062	51062	51062
10	Kit, manifold pipe (OBS)	57537	57537	57545	57537	57537	57545
11	Bolt, mini valve (WSL)	56088	56088	56088	56088	56088	56088
12	Bolt, Oven Thermostat	56125	56125		56125	56125	
13	Kit, Valve, Burner – 9000 BTU (OBS)	57244	57244	57244	57244	57244	57244
14	Kit, Valve, Burner – 6500 BTU (OBS)	57239	57239	57239	57239	57239	57239
15A	Kit, Burner Tube – right (OBS)				57548	57548	57548
15B	Kit, Burner Tube – center (OBS)				57547	57547	57547
15C	Kit, Burner Tube – left (OBS)				57549	57549	57549
15D	Burner clip, wire				57198	57198	57198
15E	Kit, Burner Gasket Kit (includes 3 gaskets)				50140	50140	50140
16	Kit, thermostat oven control	57237	57237		57237	57237	
17	Piezo Ignitor	56096	56096	56096	56096	56096	56096
18	Kit, ignition module (OBS)				57550	57550	57550
19	Kit, electronic ignition switch harness				57551	57551	57551
20	Kit, knobs (piezo, burners & oven)	57544	57544	57544	57544	57544	57544
23	Control panel label – w/o label	*	*	*	*	*	*
24	Control panel label	*	*	*	*	*	*
25	Burner box	51687	51687	51687	51687	51687	51687
26	Kit, burner spring clips				57558	57558	57558
27	Oven can	51969	51970		51969	51970	
28	Oven rack	51069	51069		51069	51069	
29	Oven shelf	51670	51670		51670	51670	
30	Door assembly includes handle – black steel	51977	51983		51977	51983	
30	Door assembly includes handle – white steel	51978	51984		51978	51984	
30	Door assembly includes handle – white glass	51981	51987		51981	51987	
30	Door assembly includes handle – black glass	51980	51986		51980	51986	
30	Door assembly includes handle – stainless steel	51958	51992		51958	51992	
30	Door assembly white handle – white steel	51957			51957		
	Door – glass insert – sm. black	51881			51881		
	Door – glass insert – lg. black		51882			51882	
	Door – glass insert – sm. white	51883			51883		
	Door – glass insert – lg. white		51884			51884	
31	Oven door handle - black	52025	52025		52025	52025	
	Oven door handle – white	52026	52026		52026	52026	
32	Kit, oven gas supply assembly	57232	57232		57232	57232	
33	Kit, pilot burner assembly	57234	57234		57234	57234	
34	Kit, oven burner	57233	57233		57233	57233	
35	Kit, thermocouple	57235	57235		57235	57235	
36	Oven can trim	51975	51976		51975	51976	
N/S	Kit, 3/16 pilot gas tube	57236	57236		57236	572356	
N/S	Kit, piezo ignition leads	57553	57553	57553	57554	57554	57554
N/S	Kit, wiring lead – electronic ignition ground				57260	57260	57260
N/S	Kit, electronic leads				57556	57556	57556
N/S	Kit, oven door hinges	57557	57559		57557	57559	
N/S	Kit, door seal	51060	51061		51060	56061	

N/S = Not shown in the illustration OBS = Obsolete # = Order quantity needed WSL = while supplies last * = Order by model, color, and style

MODEL 35 - WEDGEWOOD (RV / CV), ATWOOD (RA / CA)
Oven & Slide-In Cooktop Parts Identification

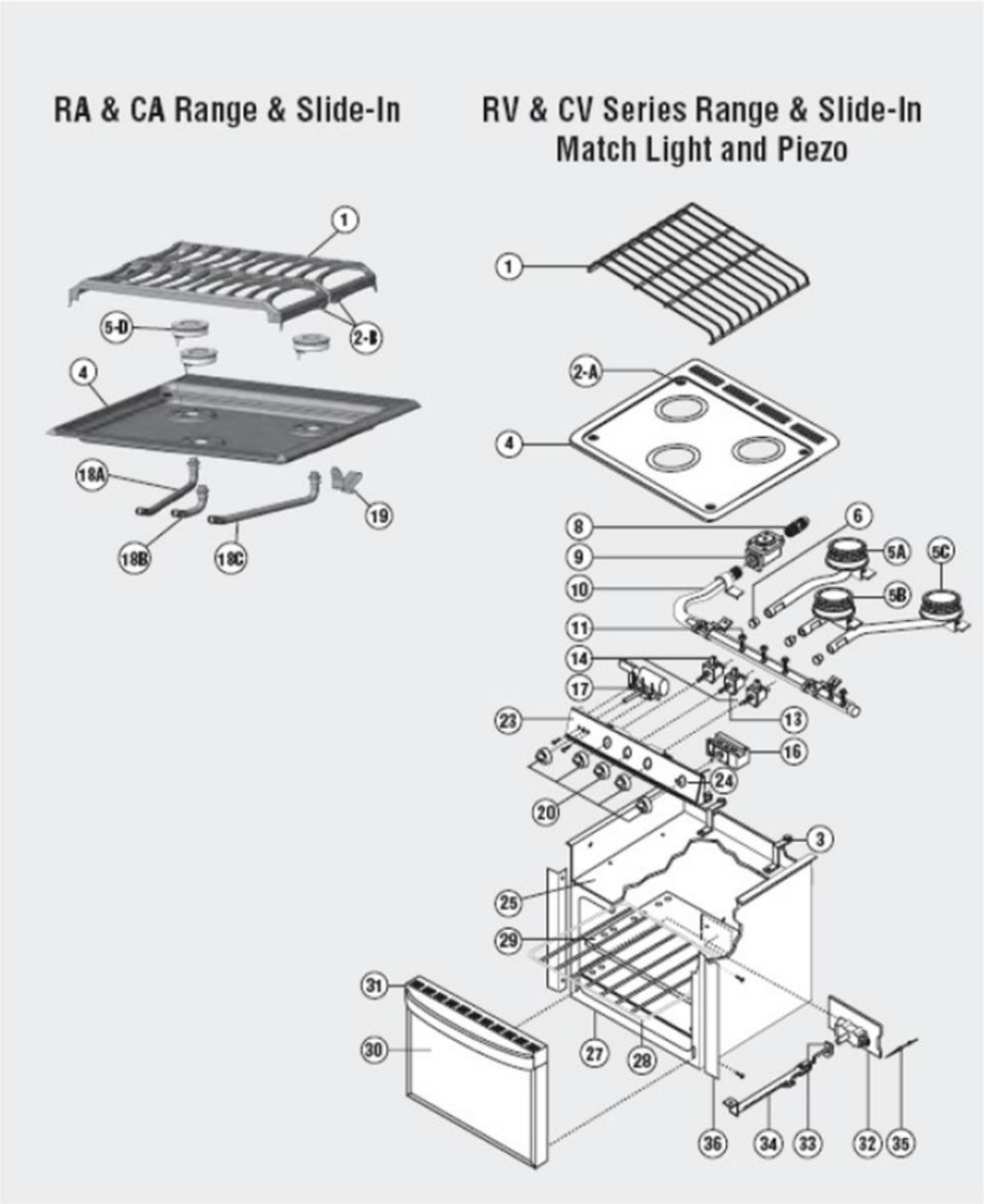

Item	Description	WEDGEWOOD			ATWOOD		
		RV		CV	RA		CA
		1735	2135	35	1735	2135	35
1	Grate - black	52890	52890	52890	57190	57190	57190
2A	Grommet	53009	53009	53009	53009	53009	53009
2B	Sealed Grate U-Channel				57194	57194	57194
3	Top Spring Clip	51035	51035	51035	51035	51035	51035
4	Range Top – white, side latches	52014	52014	52014	52753	52753	52753
	Range Top – black, side latches	52015	52015	52015	52752	52752	52752
	Range Top – stainless steel, side latches	51374	51374	51374	52308	52308	52308

Continued

5A	Kit, Burner, Sparklite – left	52717	52717	52717			
5A	Kit, Burner, Matchlit – left	52718	52718	52718			
5B	Kit, Burner, Sparklite – center	52715	52715	52715			
5B	Kit, Burner, Matchlit – center	52716	52716	52716			
5C	Kit, Burner, Sparklite – right	52713	52713	52713			
5C	Kit, Burner, Matchlit – right	52714	52714	52714			
5D	Burner head (twist lock)				52750	52750	52750
6	Bushing, Burner	53011	53011	53011	53011	53011	53011
8	Brass Fitting	52166	52166	52166	52166	52166	52166
9	Kit, gas regulator	51062	51062	51062	51062	51062	51062
10	Kit, manifold pipe	52712	52712	52164	52712	52712	52164
11	Bolt, mini valve/ thermostat	52168	52168	52168	52168	52168	52168
13	Kit, Valve, Burner – 9000 BTU	52711	52711	52711	52711	52711	52711
14	Kit, Valve, Burner – 6500 BTU	52710	52710	52710	52710	52710	52710
16	Kit, thermostat oven control	52709	52709		52709	52709	
17	Piezo Ignitor	56096	56096	56096	56096	56096	56096
18A	Burner tube – left rear				52749	52749	52749
18B	Burner tube – center front				52748	52748	52748
18C	Burner tube – right rear				52747	52747	52747
19	Burner tube bracket				52803	52803	52803
20	Kit, knobs (piezo, burners & oven)	52719	52719	52719	52719	52719	52719
23	Control panel label – w/o label	*	*	*	*	*	*
24	Control panel label	*	*	*	*	*	*
25	Burner box	51687	51687	51687	51687	51687	51687
27	Oven can	51969	51970		51969	51970	
28	Oven rack	51069	51069		51069	51069	
29	Oven shelf	51670	51670		51670	51670	
30	Door assembly includes handle – black steel	51977	51983		51977	51983	
30	Door assembly includes handle – white steel	51978	51984		51978	51984	
30	Door assembly includes handle – white glass	51981	51987		51981	51987	
30	Door assembly includes handle – black glass	51980	51986		51980	51986	
30	Door assembly includes handle – stainless steel	51958	51992		51958	51992	
30	Door assembly white handle – white steel	51957			51957		
	Door – glass insert – sm. black	51881			51881		
	Door – glass insert – lg. black		51882			51882	
	Door – glass insert – sm. white	51883			51883		
	Door – glass insert – lg. white		51884			51884	
31	Oven door handle - black	52025	52025		52025	52025	
	Oven door handle – white	52026	52026		52026	52026	
32	Kit, oven gas supply assembly	52704	52704		52704	52704	
33	Kit, pilot burner assembly	52706	52706		52706	52706	
34	Kit, oven burner	52705	52705		52705	52705	
35	Kit, thermocouple	52707	52707		52707	52707	
36	Oven can trim	51975	51976		51975	51976	
N/S	Kit, 3/16 pilot gas tube	52708	52708		52708	52708	
N/S	Kit, piezo ignition leads	57553	57553	57553	57554	57554	57554
N/S	Kit, oven door hinges	57557	57559		57557	57559	
N/S	Kit, door seal	51060	51061		51060	51061	

N/S = Not shown in the illustration OBS = Obsolete # = Order quantity needed WSL = while supplies last * = Order by model, color, and style

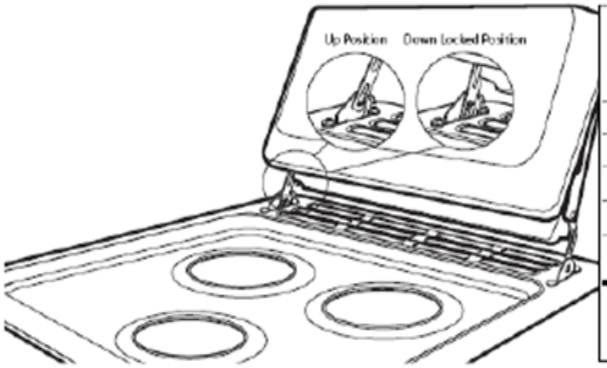

Bi-fold Cover

use with SLOTTED TOPS

MODEL NUMBER	DESCRIPTION	P/N #
BFC2-B	black, single	54106
BFC2-W	white, single	54107
BFC2-S	stainless, single	54102

(Applicable after serial number G10020000) Start date 10-2-06

HINGE REPLACEMENT KIT 51031
Includes left and right hinges

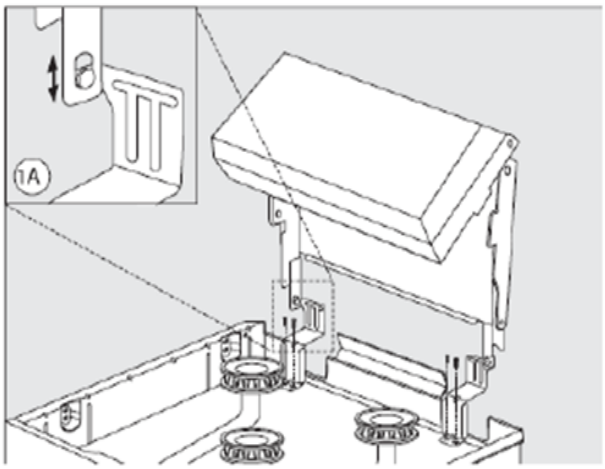

Bi-fold Cover

use with UNSLOTTED TOPS

MODEL NUMBER	DESCRIPTION	P/N #
BFC1-B	black, single	56417
BFC1-W	white, single	56418
BFC1-S	stainless, single	55895

(Applicable before serial number G10020000)

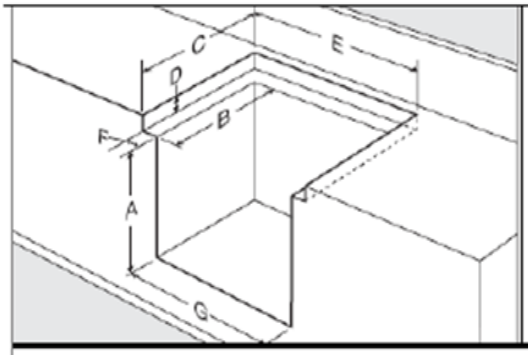

Recessed Bi-fold Cover

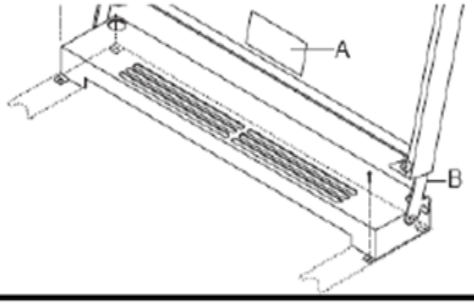

COUNTER CUT OUT DIMENSIONS - RECESSED

		R OVEN				C													
LAMINATE MATERIAL	MPD PART #	17"		21"		SLIDE-IN													
		A		A		A		B		C		D		E		F		G	
IN	MM		IN	MM	IN	MM	IN	MM	IN	MM	IN	MM	IN	MM	IN	MM	IN	MM	IN	MM
1/4	6	56397	17	432	21	533	3	76	18.5	470	20.5	521	2.31	59	24.63	625	2.19	56	20.25	514
1/32	.8	56391	17	432	21	533	3	76	18.5	470	20.5	521	1.84	47	24.63	625	2.19	56	20.25	514

		RV & RA OVEN				CV & CA													
LAMINATE MATERIAL	MPD PART #	17"		21"		SLIDE-IN													
		A		A		A		B		C		D		E		F		G	
IN	MM		IN	MM	IN	MM	IN	MM	IN	MM	IN	MM	IN	MM	IN	MM	IN	MM	IN	MM
1/4	6	56397	16	406	20	508	3	76	17.75	451	19.75	502	2.31	59	24.63	625	2.19	56	20.25	514
1/32	.8	56391	6	406	20	508	3	76	17.75	451	19.75	502	1.84	47	24.63	625	2.19	56	20.25	514

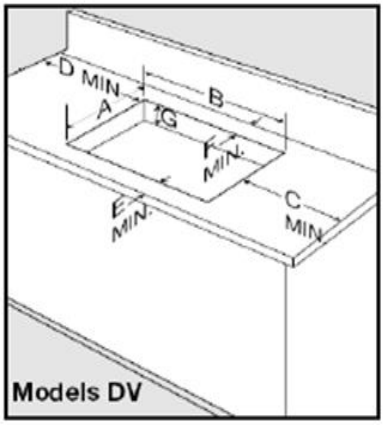

CABINET & COUNTER CUT OUT CHART

CUT OUT DIMENSIONS in inches	A	B	C	D	E
DV Models - 2 Burners	11-1/2	16-1/4	3-3/8 ◆	2-5/8 ◆	1-1/2 ◆
DV Models - 3 Burners	15	19	2 ◆	3-1/16 ◆	3 ◆
	F	G			
DV Models - 2 Burners	3-3/4 ◆	2-13/16 ▸			
DV Models - 3 Burners	4-1/2 ◆	2-13/16 ▸			

◆Minimum dimension ▸Overall depth of drop-in

Drop-In Covers

Lift-Up Drop-in Cover

Add valuable counter space with the addition of the attractive Wedgewood Vision Drop-In Cover. When in the down position, it completely covers the Drop-In and provides a stable surface as it rests on the countertop itself. When in the up position with the windguards extended (as in the photograph at right), it provides a shield against splatters to the sides and back. Available for two- and three-burner units in black, white or stainless steel. The cover comes completely assembled with mounting screws.

DROP IN COVER PART NUMBERS

2-BURNER (DV-20)

MODEL NUMBER	COLOR	PART NUMBER
DV 2B LR	BLACK	56458
DV 2S LR	STAINLESS	56459
DV 2W LR	WHITE	56438

3-BURNER (DV-30)

MODEL NUMBER	COLOR	PART NUMBER
DV 3B LR	BLACK	56460
DV 3S LR	STAINLESS	56461
DV 3W LR	WHITE	56435

ıg Adobe CreatePDF online

DV 20

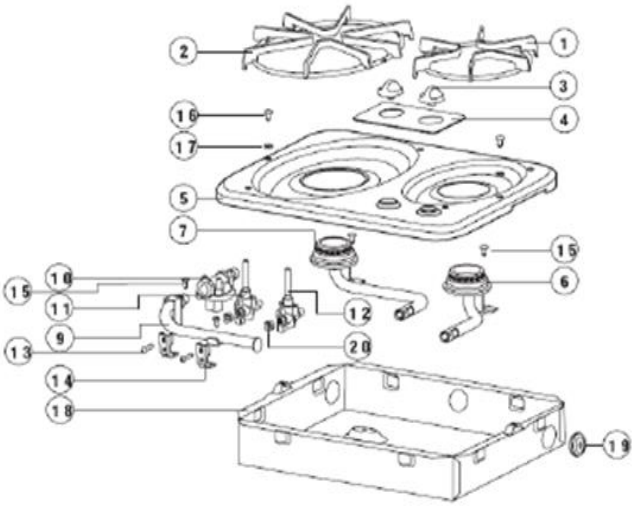

DV 30

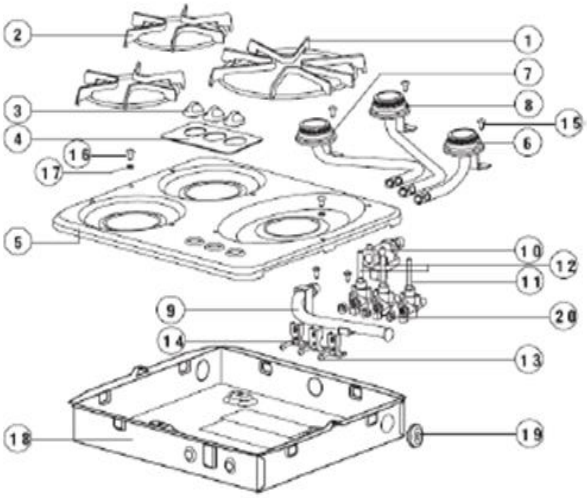

Item	Description	DV20	DV30
1	Round Grate	56378	56378 (2)
2	Oval Grate	56379	56379
3	Burner Knob	56380 (2)	56380 (3)
4	Label	56388	56491
5	Top - White	57118	57115
	Top - Black	57119	57116
	Top – Stainless Steel	57099	57102
6	Right Burner	56385	56483
7	Left Front Burner	56384	56482
8	Left Rear Burner	NA	56481
9	Manifold Pipe	56383	56478
10	Regulator	51062	51062
11	Valve 7200 Btu/h	56468	56468
12	Valve 5200 Btu/h	56469	56469 (2)
13	Screw - Valve	56480 (2)	56480 (3)
14	Valve Bracket	56479 (2)	56479 (3)
15	Screw - Burner	51325(4)	51325(5)
16	Screw - Top	56377 (2)	56377 (2)
17	Nylon Washer	52434 (2)	52434 (2)
18	Burner Box	56498	56476
19	Inlet Pipe Grommet	92610	92610
20	Gasket, Valve	56366 (2)	56366 (3)
N/S	Extension Tube	57181	57182

COOKING APPLIANCE LIMITED WARRANTY

Atwood Mobile Products warrants to the original owner and subject to the below mentioned conditions, that this product will be free of defects in material or workmanship for a period of two years from the original date of purchase. Atwood's liability hereunder is limited to the replacement of the product, repair of the product, or replacement of the product with a reconditioned product at the discretion of Atwood Mobile Products. This warranty is void if the product has been damaged by accident, unreasonable use, neglect, tampering or other causes not arising from defects in material workmanship. This warranty extends to the original owner of the product only and is subject to the following conditions:

1. For two years from the date of the original purchase Atwood warrants that this product will be free of defects in material and workmanship with the exceptions noted below. This warranty includes reasonable labor charges required to remove and replace the part. Service calls to the customer's location are not considered part of these charges and are therefore the responsibility of the owner.
2. This warranty does not cover the following items classified as normal maintenance and/or customer damage.
   a. Damage, discoloration or scratches to porcelain enamel or other finishes from improper use and care.
   b. adjustment of gas pressure
   c. cleaning or adjustment of any burners
   d. cleaning or replacement of burner orifices
   e. cleaning or adjustment of pilot and thermocouple
   f. damage to glass
   g. products purchased for commercial or industrial use.
3. In the event of warranty claim the owner must contact in advance either an authorized Atwood Service Station or the Atwood Service Department. Warranty claim service must be performed at an authorized Atwood Service Station (a list will be provided at no charge) or as approved by the Atwood Service Department Atwood Mobile Products, 1120 North Main St., Elkhart, IN 46514 USA. Phone 866-969-3118.
4. Return parts must be shipped to Atwood Mobile Products "prepaid". Credit for shipping costs will be included with the warranty claim. The defective parts become the property of Atwood Mobile Products and must be returned to the Consumer Service Department, Atwood Mobile Products, Greenbrier Operations, 6320 Kelly Willis Road, Greenbrier, TN 37073 USA.
5. This warranty applies only if the unit is installed according to the installation instructions provided and complies with local and state codes.
6. The warranty on replacement parts is the unused portion of the original warranty period.
7. Damage or failure resulting from misuse (including failure to seek proper repair service) misapplication, alterations, water damage or freezing are owner's responsibility.
8. Atwood does not assume responsibility for any loss of use of vehicle, loss of time, inconvenience, expense for gasoline, telephone, travel, lodging, loss or damage to personal property or revenues. Some States do not allow the exclusion or limitation of incidental or consequential damages, so the above limitations or exclusions may not apply to you.
9. Any implied warranties are limited to two (2) years. Some States do not allow limitations on how long an implied warranty lasts, so the above limitation may not apply to you. This warranty gives you specific legal rights and you may also have other rights, which may vary, from State to State.
10. Replacement parts purchased outside the original cooking warranty carry a 90 day warranty. This includes the part at no charge and reasonable labor charges to replace it.

This Atwood product is designed for use in recreation vehicles for the purpose as stated in the 'data plate'. Any other use, unless authorized in writing by the Atwood Engineering Department, voids the warranty. Atwood/Wedgewood Vision Products include range/oven, drop-in, slide-in and high pressure stoves.

Atwood Extended Service Contract Provides These Extras!

ATWOOD WATER HEATER inner tank

- Extends coverage to full five years.

***HYDRO FLAME* FURNACE combustion chamber**

- One price covers parts and labor

ATWOOD/WEDGEWOOD RANGE gas valves & manifold

- In shop service (see complete information on form below)

Also available... Service Related Travel

- Includes mileage travel expense by authorized service center
- Up to 200 miles total of service travel
- One full year of coverage

ATWOOD EXTENDED SERVICE CONTRACTS

☐ $125.00 **Water Heater Tank**—An extended service contract is available covering the parts and labor for replacement of the inner tank in the event the water heater tank develops leaks due to corrosion. This extends the original (2) two year warranty an additional (3) three years for a total of (5) years to the original owner from the original date of purchase of the water heater or vehicle.

Model: _____

Serial Number: _____

☐ $75.00 **Furnace Combustion Chamber**—An extended service contract is available covering the parts and labor for replacement of the combustion chamber in the furnace in the event the combustion chamber were to prematurely fail due to defects in material or workmanship. This extends the original (2) two year warranty an additional (3) three years for a total of (5) years to the original owner from the original date of purchase of the furnace or vehicle.

Model: _____

Serial Number: _____

☐ $75.00 **Range Gas Valves and Manifold**—An extended service contract is available covering the parts and labor for replacement of the range burner valves and manifold in the event of premature failure due to defects in material and workmanship. This extends the original (2) two year warranty an additional (3) three years for a total of (5) years to the original owner from the original date of purchase of the water heater or vehicle.

Model: _____

Serial Number: _____

☐ $(10.00) Save $10 by selecting all three service contracts.

☐ $60.00 **Mileage Travel Expense**—Mileage travel expense is not covered by the Limited Warranty issued with each product. If it is anticipated that it may be inconvenient to transport your vehicle or Atwood product to obtain service you may choose to purchase this Service Mileage option. This will pay up to 200 miles of service travel at 20 cents per mile to an autho[illegible]er whose service personnel travels to your location to p[illegible] work on our Atwood product. This is for (1) one year from [illegible]se of the vehicle or Atwood water heater, furnace or ra[illegible]

☐ Water Heater	$125.00
☐ Furnace	$75.00
☐ Range	$75.00
☐ Less $10 for all 3	($10.00)
☐ Mileage/Travel	$60.00
Total Due:	$_____

To qualify for any of these options, they must be purchased within 30 days of the vehicle or product purchase. Prices listed are in US DOLLARS-please make check amount accordingly. Upon receipt of this completed card together with your check or money order, Atwood will send you a written confirmation of the options you selected.

EXTENDED SERVICE ORDER FORM

Today's Date: _____

Date of Purchase: _____

Name: _____

Phone: _____

Address: _____

City: _____ ST: ___ Zip: _____

Dealer's Name: _____

RV Manufacturer: _____

Atwood

Atwood Mobile Products
1120 N Main
Elkhart, IN 46514

ATWOOD RETURN GOODS PROGRAM

WARRANTY RETURNS – The Warranty Program, Must Return Parts List and approved Flat Rate Schedule provide the framework for Warranty Returns.
NON-DEFECTIVE RETURNS – A restocking fee of 20% will be charged for handling overstock returns or standard stock items ordered incorrectly by the customer. The product must be received in resalable condition. Product that has been specifically designed at the customer's request is non-returnable. Obsolete or outdated product will not be accepted for credit.
DEFECTIVE RETURNS – Within 30 days of sale, defective returns are to be shipped back to the respective manufacturing facility for Problem Cause Analysis (PCA), unless otherwise advised.
ALL WARRANTY RETURNS – If the PCA determines Atwood is responsible, full credit or replacement parts will be issued. If the PCA determines the customer is responsible, partial or no credit will be issued at Atwood's discretion.
SHIPPING DAMAGE – Once the product has been accepted at your facility, it is the customer's responsibility to file damage claim with the carrier.
RETURN PARTS – Before returning any part to Atwood, a Returned Goods Number (RGN) must be obtained by calling Atwood Mobile Products Service Department at 866-869-3118. Provide date of purchase, model and serial number for appliances, and make, model and last 8 digits of VIN for hardware, windows and doors. If claims are not submitted within 6 months from the date of repair, claims will not be considers.
SHIPPING – If the PCA determines Atwood is responsible for the disposition of a defective and/or warranted part, reasonable shipping charges are reimbursed. All products not shipped via Atwood trucks should be shipped prepaid via UPS Ground when able (unless negotiated at the time the RGN is given). **No collect shipments will be accepted.**
PACKAGING – The RGN must be identified on each container and all packing information. Product returned must be packaged to prevent shipping damage. Full credit will not be issued on product sent back in an open skid or improperly packaged. Additional product boxes are available upon request when applicable. Warranty Claims must be submitted to the correct division.
MUST RETURN PARTS LIST – Atwood requires the defective part to be returned with the warranty claims form. Failure to accompany your claim with the part will result in the non-shipment of a replacement part, or the non-processing of the appropriate credit until the part is received by Atwood.
Before returning the part, an RGN (Return Goods Number) must be obtained by calling the Atwood Service Department at 866-869-3118. This RGN is required for all products. Without this RGN appearing on the outside of the shipping carton, the shipment will be refused by our Receiving Department.
RETURN CREDIT – Credit will be issued 30 days after product is returned or RGN is dispositioned.

PARTS MUST BE RETURNED TO THE CORRECT DIVISION

Jacks, Couplers, 5th Wheel, Leveling, Braking Systems & Seating Products
57912 Charlotte Avenue
Elkhart, IN 46517

Water Heaters, Ranges, Ovens Slide-Ins & Drop-Ins
6320 Kelly Willis Road
Greenbrier, TN 37073

Furnace, LP & CO Detectors & Distribution Panels (Convertors)
1874 South Pioneer Road
Salt Lake City, UT 84104

Creation Brand Mfg. Housing Windows & Doors, RV Doors, Ladders & Gas Bottle Assemblies
2701 Ada Drive
Elkhart, IN 46514

Glass
5406 U.S. 24
Antwerp, OH 45813

MUST RETURN PARTS LIST

Hardware
All Parts*

Water Heaters
Circuit boards*
Complete water heaters
Electric thermostats*
Gas solenoid valves
Mixing valves
Gas thermostat valves
Heating elements & gaskets*
Inner tanks
Pilot assemblies
Pressure temperature relief valves
Spark probe assemblies*
Relay kits*
Gas controls*

Ranges, Ovens, Slide-Ins & Drop-Ins (cooktops)
12 volt ignition module
Burners with ignition
Rotary piezo
Burner valves
Complete ranges (by approval only)
Oven thermostats
Thermocouplers
Pilot assemblies
Regulators*
Oven door

Furnaces, Detectors & Distribution Panels
All parts*

Seating Products & RV Doors
All parts

* Required for Canadian returns

FOR EFFICIENT PROCESSING OF CLAIM

1. **CALL for RGN #:** 866-869-3118
2. **COMPLETE** Warranty Service Report form.
3. Clearly **MARK THE PART** with the RGN #.
4. **PACKAGE** defective part, **INCLUDE** the Warranty Service
5. Clearly **MARK THE OUTSIDE OF THE PACKGE** with the RGN #.
6. **SEND THE PART TO THE CORRECT DIVISION** of Atwood Mobile Products LLC

Atwood®
Atwood Mobile Products LLC
1120 North Main Street • Elkhart, IN 46514
PHONE: 574•264•2131 FAX: 574•206•9713
www.atwoodmobile.com

EFFECTIVE 8/19/09

WARRANTY SERVICE REPORT

CALL TOLL FREE: 866-869-3118 OR FAX: 574-206-9655

RMA #: (PROVIDED BY ATWOOD)

☑ APPROPRIATE BOX BELOW

☐ 5TH Wheel Braking Systems Couplers Jacks	☐ Furnaces Alarms Distribution Panels	☐ Cooktops Drop In's Ranges Water Heaters	☐ Air Conditioners On Demand – Water Heaters Refrigerators	☐ All Fan-Tastic Vent Products
RETURN TO: Atwood Mobile Products 57912 Charlotte Avenue Elkhart, IN 46514	**RETURN TO:** Atwood Mobile Products Salt Lake Operations 1874 S. Pioneer Road Salt Lake City, UT 84104	**RETURN TO:** Atwood Mobile Products Greenbrier Operations 6320 Kelly Willis Road Greenbrier, TN 37073	**RETURN TO:** Atwood Mobile Products 301 E. Simonton St. Elkhart, IN 46514	**RETURN TO:** Fan-Tastic Vent 201 E. Simonton St. Elkhart, IN 46514

Dir./Svc. Ctr. Name		Customer Name	
Address		Address	
City / ST / Zip		PO Box	
Phone #	Fax #	City / ST / Zip	
Customer #	Technician's Name	Phone #	Parts Invoice #
Appliance Model #	Appliance Serial #	Date of Purchase	Date of Repair
VIN # (last 8 digits only)	Spec # (Water heaters only)	Style of RV & Year	Make of RV (do not use brand name)

PROBLEMS ENCOUNTERED:	Part # Used	Part Cost	Time	Labor Cost

SERVICE PERFORMED:

CHECK LIST:

1) **Form must be complete and include with returned part.**
2) **Mark part with RMA#.**
3) **RMA must be on the outside package.**

Parts used will automatically be replaced to your stock at no charge, freight prepaid, unless a copy of your purchase invoice is provided.

Parts Total	**$**
Labor total	**$**
Freight	**$**
Total Claimed	**$**

TECHNICIAN SIGNATURE

CUSTOMER'S SIGNATURE

Atwood
Atwood Mobile Products LLC
1120 North Main Street • Elkhart, IN 46514
PHONE: 574•264•2131 FAX: 574•206•9713
www.atwoodmobile.com

Recreation Vehicle Ranges

Flat Rate Schedule

11/2/11

TIME ALLOWANCE SCHEDULE in hours:	RV 20 RV 20 RV 34 RV 35	RA 20 RA 20 RA 34 RA 35	CA 20 CA 34 CA 35 CV 35 CV 34	DV-30 DV-20
Complete Unit	1.0	1.0	.7	.5
Bifold Cover	.2	.2		
Burner Head	.3	.3	.3	.3
Burner Head Electrode	.3	.3	.3	.3
Burner, Oven	.3	.3		
Cover, Manifold	.6*	.6*	.4*	.4*
Handle	.2	.2		
Hinge, Door	.5	.5		
Ignition Module	.7	.7	.7	
Ignition Switch	.7	.7	.7	
Oven Control (Thermostat)	1.0*	1.0*		
Oven Door	.3	.3		
Maintop	.2	.2	.2	.2
Manifold, Pipe	.5	.5	.5	.5
Piezo Igniter	.5	.5	.5	
Regulator	.5*	.5*	.5	.5
Safety Valve/Pilot Assembly	.5	.5		
Seal	.3	.3		
Spring, Hinge	.3	.5		
Trim, Bottom	.6*	.6*		
Trim, Maintop, LH/RH	.9*	.9*	.6*	
Trim, Vent Top	.7*	.7*	.5*	
Valve, Burner	.6	.6	.6	.6
All Other Parts As Approved	.5*	.5*	.5	.5

*indicates 0.5 hours will be allowed to remove and install the appliance. If two or more parts are replaced on the same appliance during the repair, the R & R allowance to remove the appliance will be applied to only one part.

NO LABOR IS ALLOWED TO CHANGE KNOBS

Above time allowances include all operations involved in the diagnosis, location and replacement of part. Also, included is the time required to remove and replace any part or assembly that is in the path of a part being replaced and gas leak test when applicable.

Note: Warranty claims must be filed and received within six months from the date of repair. Claims received beyond this time frame will not be considered for warranty payment.

Show next page (Right Arrow)

Atwood

1120 North Main Street • Elkhart, IN 46514
PHONE: 574-264-2131 **FAX:** 574-262-2550
INTERNET: http://www.atwoodmobile.com

INFORMATION NOTICE

RECREATION VEHICLE LP PRESSURE DROP LEAK TEST

2/13/03

1. Attach pressure gage downstream of an appliance regulator. Pressurize entire recreation vehicle LP piping system to between 10" (250 MM) and 14" (350 MM) water column and then turn off pressure source.

   FIGURE 1 shows a pressure gage fitted over an opened center burner valve of the recreation vehicles range.

   Note: The system pressure of 13" water column reaches the gage under a no-flow condition. Under flow conditions the pressure should read 10" water column.)

Note: When installing a pressure gage onto a burner valve remove the top burner by removing the screw used to attach the burner to the burner box.

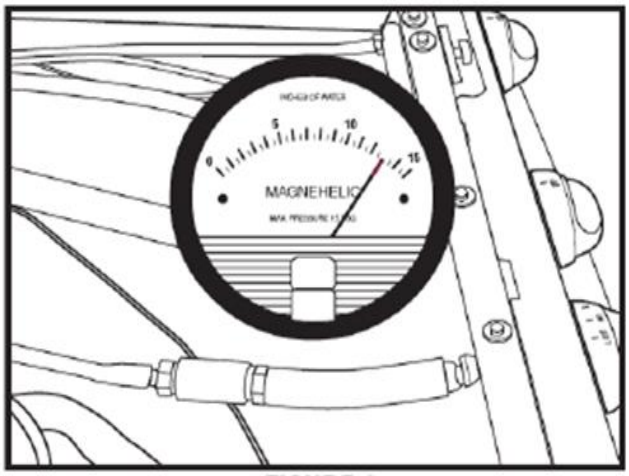

FIGURE 1

2. Reduce system pressure to 8" (200 MM) water column (see FIGURE 2) so that the appliance regulator is in an open condition by opening an adjacent valve. Skipping this step will invalidate the results.

   During a 3-minute period a pressure drop shall not occur.

   Note: This test is ONLY valid when performed using the entire recreation vehicle LP piping system.

   The piping system of the RV must be the same temperature as the ambient air or there will be changes in pressure due to expansion and/or contraction.

   Leak test should only be performed by a qualified technician.

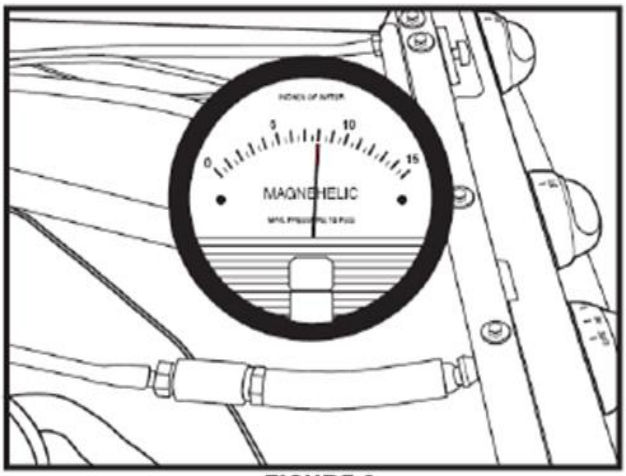

FIGURE 2

Test Procedures from ANSI A119.2, 2002 edition, section 5.4.18.2 item (1) and CSA Z240, RV Series-99, section 11.1
Atwood Mobile Products Information Bulletin REV February 10, 2003.

Atwood
1120 North Main Street • Elkhart, IN 46514
PHONE: 574•264•2131 **FAX**: 574•206•9713
INTERNET: http://www.atwoodmobile.com

LITERATURE NUMBER **MPD 50108**

INFORMATION NOTICE

REPLACEMENT OF BURNER TUBES

ATWOOD SEALED BURNER COOKING APPLIANCES

11/21/07

INSPECTION AND REPLACEMENT INSTRUCTIONS FOR BURNER TUBES

This recall program applies to Atwood Sealed Burner Cooking Appliances manufactured between December 3, 2006 and April 6, 2007 with a model number beginning with 'R-A33' or 'C-A33'.

Verify the manufacture date of the range or slide-in cooktop by looking down through the slotted vents on the back of the range top. DO NOT REMOVE THE RANGE TOP TO READ THE MANUFACTURE DATE. If there is a green dot label affixed to the burner box near the manufacture date, the burner tubes on this unit have already been replaced. Fill out and return the repair verification form as instructed.

If there is no green dot label, and your manufacture date and model falls within the scope of this notice, have a qualified technician perform the following instructions:

⚠ CAUTION

ONLY A QUALIFIED TECHNICIAN MUST REPLACE BURNER TUBES

REMOVE TOP:

1. Remove top by pushing with thumb and palm on back ridge of top to slide top back.
2. With top still slid back, lift up on front corner to reveal burner box and burner tubes. Disconnect spark wires from burners if necessary.

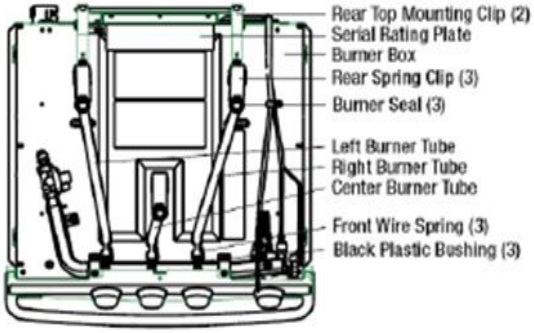

REMOVE BURNER TUBES:

1. Remove and discard the three burner seals.
2. Disconnect left rear burner tube by pushing the rear spring clip back and pivot burner tube flanged collar away from rear spring clip.
3. Disconnect front of left burner tube by pulling wire clip away from burner tube and slide burner tube off of burner valve orifice.
4. Retain rear spring clip, front wire clip, and black plastic bushing on burner valve orifice all in original positions.
5. Repeat steps 2 - 4 to remove right and center burner tubes.
6. DO NOT DISCARD OLD BURNER TUBES, they must be returned to Atwood. Follow the procedure in your letter.

INSTALL NEW BURNER TUBES:

1. Install front of left burner tube over black plastic bushing on burner valve orifice. Pull tube towards you until spring clip snaps into square opening in burner tube.
2. Slide burner tube back and forth to verify the front wire spring clip retains burner tube on burner valve.
3. Push rear spring clip back and pivot flanged collar on left burner tube into slot in rear spring clip.
4. Repeat steps 1 - 3 for center and right burner tube installation.
5. Install three new burner seals, one per burner.

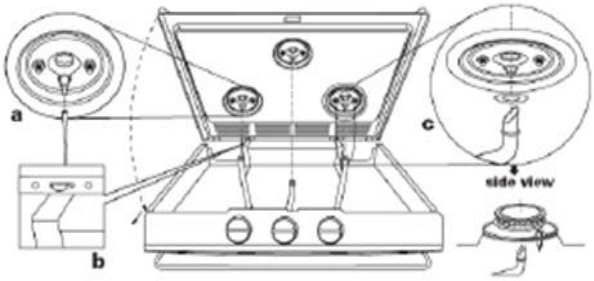

REINSTALL RANGE TOP:

1. Place the top on the range with the tabs on the spring clips in the slots on the top (b).
2. Attach spark wires to burners (a), routing the wires away from the center of the burners.
3. Burner tube gaskets must be in place (c).
4. Rotate the top downward to insure all three-burner tubes fit up into the burner caps (c). Using a side-to-side motion when rotating the top down may make this easier.
5. Once the tubes are up into the burner cap, push backwards on the top until the bracket(s) on the front of the top fits into the control panel.
6. Check each burner for proper lighting to ensure that the burner tube has been inserted into the burner head.

Atwood Mobile Products LLC
1120 North Main Street • Elkhart, IN 46514
PHONE: 574•264•2131 **FAX**: 574•262•2550
INTERNET: http://www.atwoodmobile.com

Literature Number MPD 57562

RANGE/OVEN DOOR REMOVAL AND REPLACEMENT INSTRUCTIONS

ENGLISH

Effective 11/19/08

SAFETY ALERT SYMBOLS Safety Symbols alerting you to potential personal safety hazards. Obey all safety messages following these symbols.	
⚠ **WARNING** avoid possible injury or death	⚠ **CAUTION** avoid possible injury and/or property damage

FOR YOUR SAFETY
READ ALL INSTRUCTIONS BEFORE INSTALLATION

RANGE/OVEN DOOR REMOVAL AND REPLACEMENT INSTRUCTIONS

1. Open oven door so that the hinges on each side of the door are visible. Place a metal pin (nail, cotter pin etc) in the hole (FIG A) of the hinges on each side of the door. This will stop the hinges on each side of the door from closing completely.

2. Close the door so that the metal pin stops the hinges on each side of the door from folding up completely.

3. Lift the door up and off the hinges on each side of the door and away from the range.

4. To replace the door on the hinges on each side of the door, line up the hinge slots in the door panel with the hinges and allow the door to slide onto the hinges.

5. Open the door so as to relieve the pressure of the closed hinges from the metal pins and remove the pins from the hinges.

6. Allow the door to close

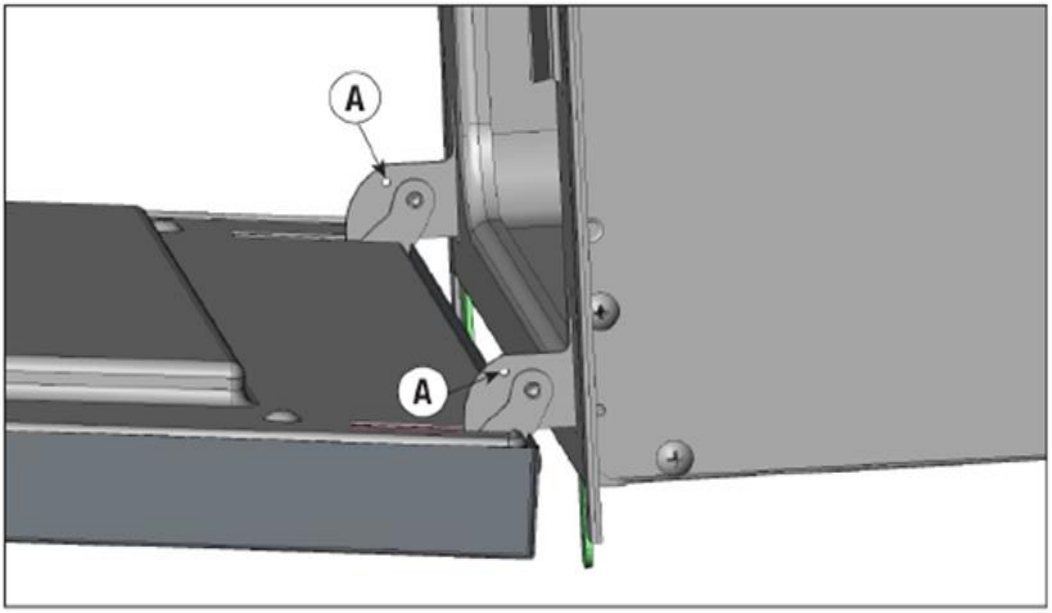

Atwood®
A Division of Dura Automotive Systems
1120 North Main Street • Elkhart, IN 46514
PHONE: 574·264·2131 FAX: 574·262·2550
INTERNET: http://www.atwoodmobile.com

INFORMATION NOTICE

BI-FOLD COVER

LP Gas Range & Slide-In Cooktops -
RV, CV, RA, CA (33) MODELS

Effective 9/25/06

Effective October 2006, all Atwood Bi-Fold covers will be manufactured with a new hinge/arm operating mechanism.

- No dimensional change to the cover or cooking appliance.
- The bi-fold covers are compatible with all appliance tops currently produced since March 2006.

Bi-Fold Cover Part Number Changes

MODEL NUMBER	DESCRIPTION	OLD P/N #	NEW P/N #
BFC2-B	black, single	56417	54106
BFC2-B	black, 5-pack	54005	54108
BFC2-W	white, single	56418	54107
BFC2-W	white, 5-pack	54004	54109
BFC2-S	stainless, single	55895	54102
BFC2-S	stainless, 5-pack	55902	54105

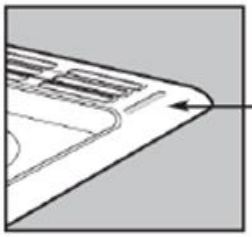

All appliance tops manufactured since March 2006 will have slots on the back to accept the new hinge/arm.

Refer to MPD 53129 for complete Bi-Fold Cover instructions.

Atwood®
1120 North Main Street • Elkhart, IN 46514
PHONE: 574·264·2131 **FAX:** 574·206·9713
INTERNET: http://www.atwoodmobile.com

LITERATURE NUMBER **MPD 53405**

REGULATOR REPLACEMENT

Effective 11/21/07

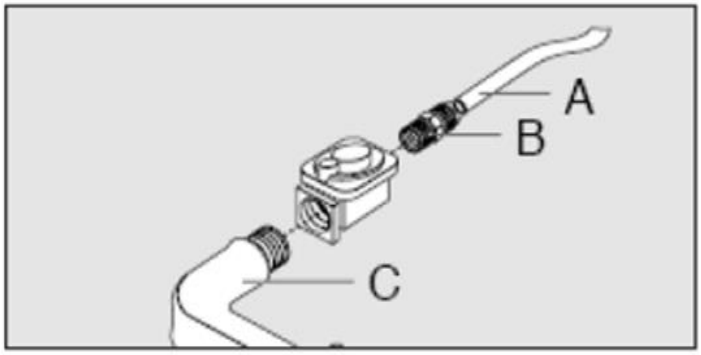

For complete Wedgewood range & cooktop instructions consult MPD 56280.

INSTALLATION PROCEDURE-

Note: Before installing new regulator apply a small amount of pipe sealant suitable for use in a LP gas system to pipe threads of fitting on manifold and pipe threads of fitting that will be reinstalled to inlet of regulator.

Note: Be sure to install regulator with arrow on body of regulator in the direction of gas flow (pointing towards manifold).

1. Install new regulator following instructions in reverse order.
2. After installation is complete turn on gas supply.

⚠ WARNING
EXPLOSION OR FIRE

- Do not use matches, candles or other sources of ignition to test fittings and gas lines for leaks.

3. Check all connections for gas leaks using a non-corrosive leak detection fluid. Do not use a soap and water solution. Leak test in excess of 8 oz. per square inch (1/2 psi) of air pressure will invalidate warranty.

Atwood®
Atwood Mobile Products
1120 North Main Street • Elkhart, IN 46514-3203
PHONE: 574-264-2131 FAX: 574-206-9713
INTERNET: http://www.atwoodmobile.com

11-2-10

Information Notice

NHTSA Recall No. 10E-046

In accordance with the requirements of the National Traffic and Motor Vehicle Safety Act Atwood Mobile Products LLC has determined that a defect which relates to motor vehicle safety exists in certain Atwood Range Ovens manufactured on or before September 20, 2010 with model numbers beginning with RV1735, RV2135 or RA2135.

Some of the subject units may contain a small fracture within the line delivering gas to the oven cavity burner. A fracture may allow gas to leak, causing an unexpected build up of gas in the vehicle. This condition can lead to a fire or explosion, and poses an asphyxiation risk. Gas is supplied through this line only when the oven cavity is in use, and thus this condition is not present when the range oven controls are off. Therefore, please ensure that the oven function on these units is not used until they have been certified or repaired; we request your support in ensuring the oven cavity of these units is not lit or used. The range top burners may be used as normal, as long as the oven controls are off

To identify if a unit is within the recall period look for model and serial number under the top of the unit. If the range has already been inspected there will be a green check mark in the burner box.

If you have any questions or concerns please contact Atwood at 866-869-3118, please have your model and serial number available.

Thank you

Atwood Service